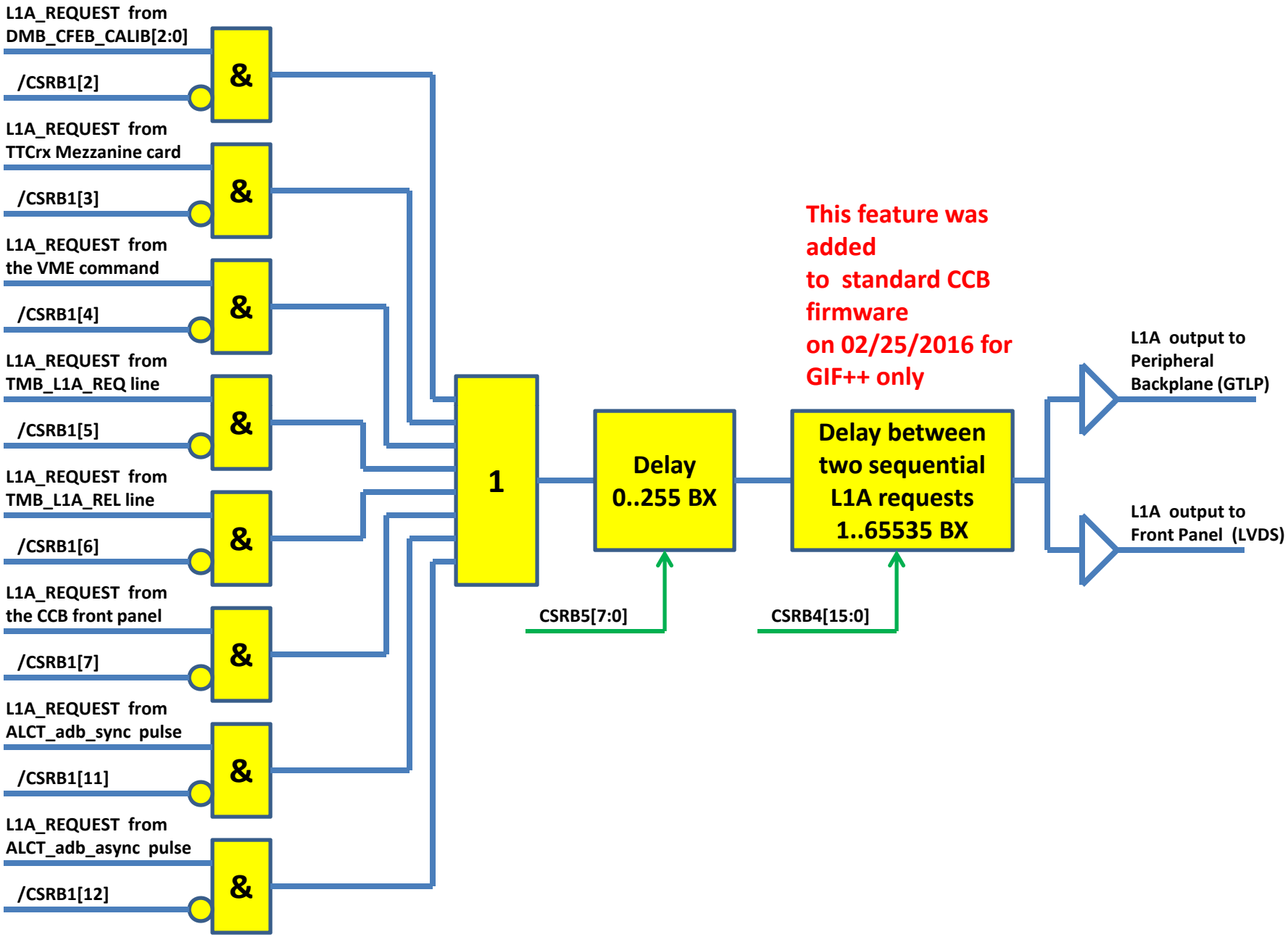
L1A_REQUEST from DMB_CFEB_CALIB[2:0]
/CSRB1[2]
L1A_REQUEST from TTCrx Mezzanine card
/CSRB1[3]
L1A_REQUEST from the VME command
/CSRB1[4]
L1A_REQUEST from TMB_L1A_REQ line
/CSRB1[5]
L1A_REQUEST from TMB_L1A_REL line
/CSRB1[6]
L1A_REQUEST from the CCB front panel
/CSRB1[7]
L1A_REQUEST from ALCT_adb_sync pulse
/CSRB1[11]
L1A_REQUEST from ALCT_adb_async pulse
/CSRB1[12]
&
1
Delay 0..255 BX
CSRB5[7:0]
Delay between two sequential L1A requests 1..65535 BX
CSRB4[15:0]
This feature was added to standard CCB firmware on 02/25/2016 for GIF++ only
L1A output to Peripheral Backplane (GTLP)
L1A output to Front Panel (LVDS)